MOUNTING PLATES FOR

MOUNTING PLATE SUB-ASSY.
Rev. A
07-17-07

D & D PRODUCTION INC.®

PHA1-80 (HD. 314) OFFSET ASSEMBLY

2500 WILLIAMS DRIVE • WATERFORD, MI • 48328 PHONE : (248) 334-2112 • FAX : (248) 334-0062

MPU-3150-4A Upper Mounting Plate

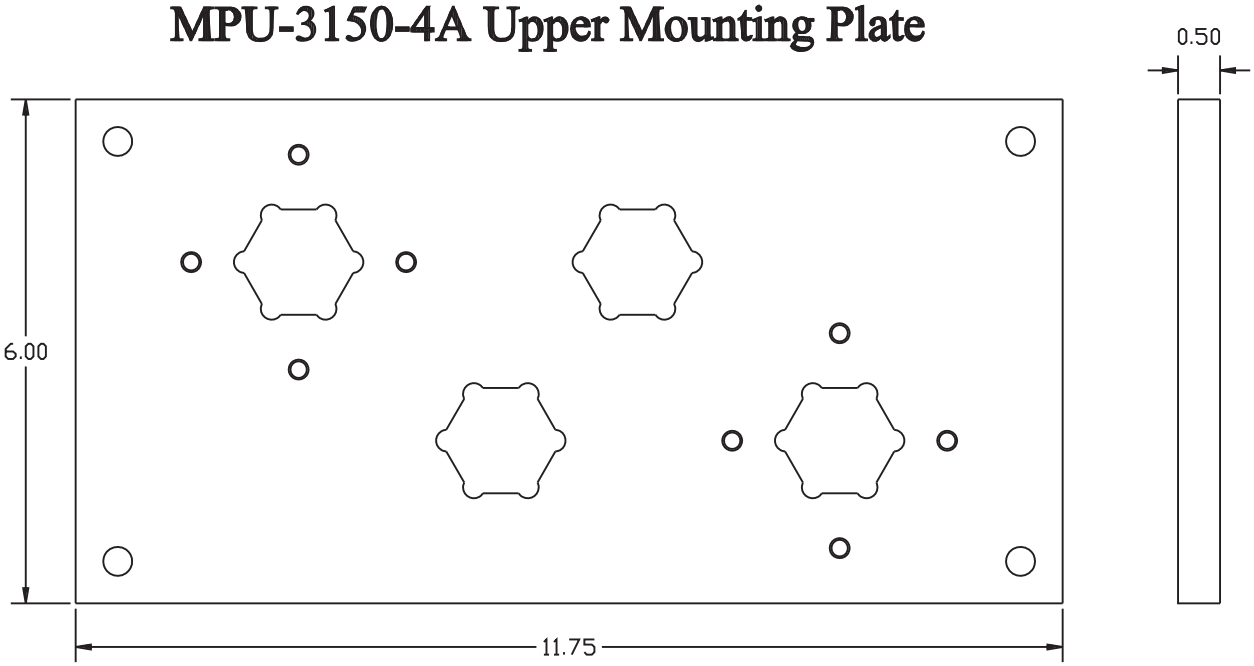

MPB-3150-4A Lower Mounting Plate

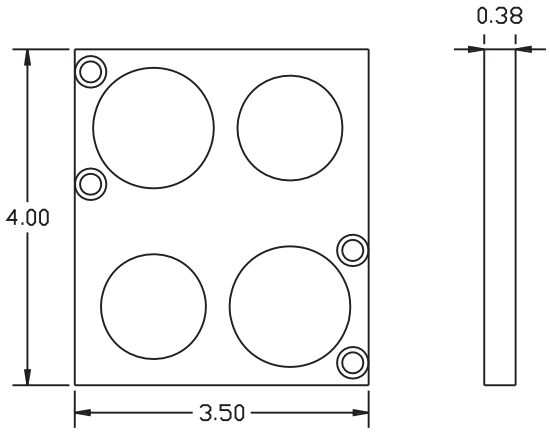

ITEM	DESCRIPTION	PART NO.	ITEM	DESCRIPTION	PART NO.
1	Upper Mounting Plate	MPU-3150-4A			
2	Lower Mounting Plate	MPB-3150-4A			