ASSEMBLY NO. CDA-L24
HEAD NO. 8763A2

CHAIN DRIVE ASS'Y
Rev. A
07-25-07

D & D PRODUCTION INC.®
2500 WILLIAMS DRIVE • WATERFORD, MI • 48328 PHONE : (248) 334-2112 • FAX : (248) 334-0062

SIDE VIEW

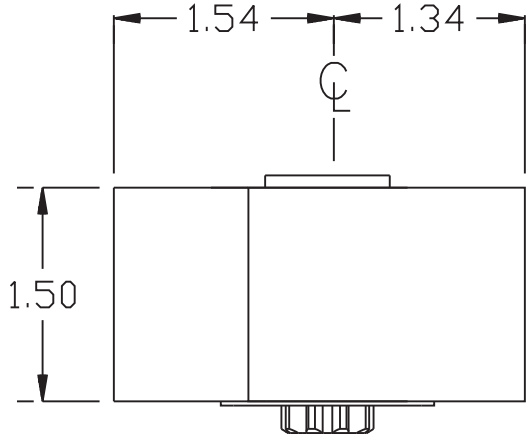

TOP VIEW

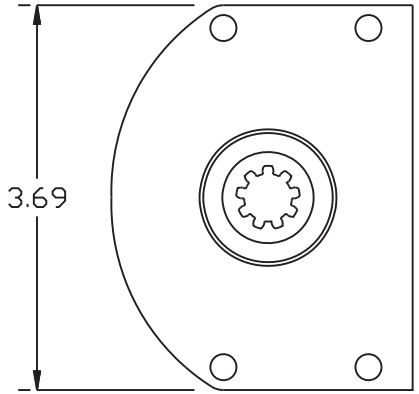

PARTS BLOWOUT

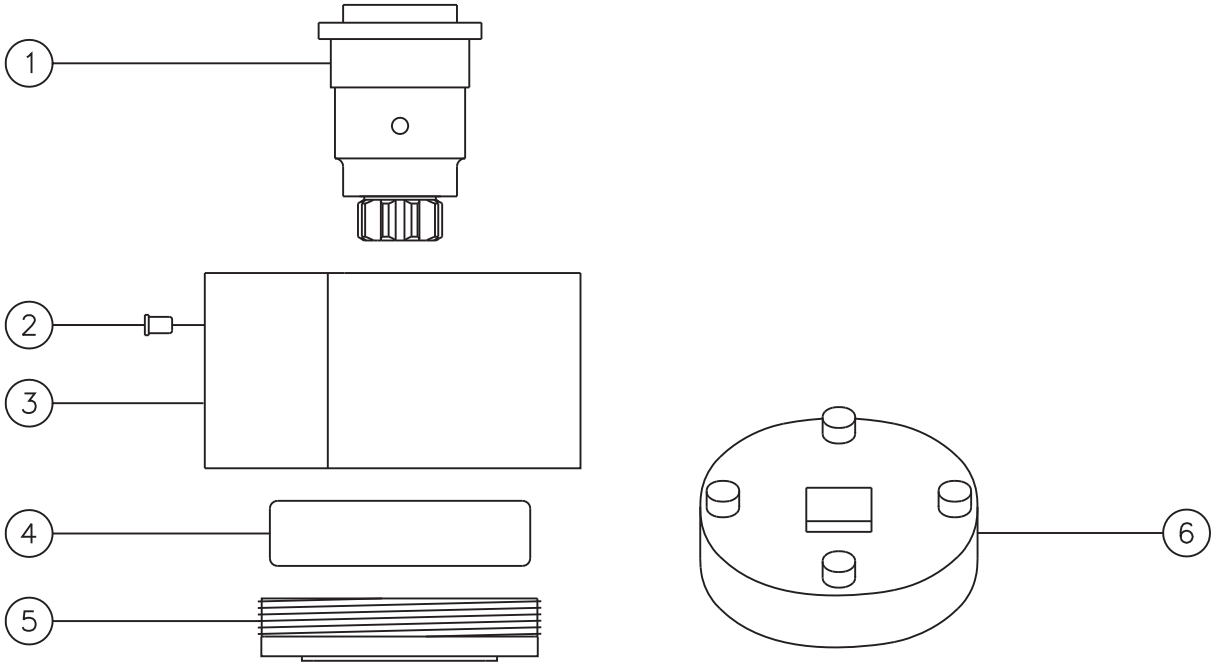

ITEM	DESCRIPTION	PART NO.	ITEM	DESCRIPTION	PART NO.	ITEM	DESCRIPTION	PART NO.
1	Drive Shaft Assy.	DS-S4734-A						
2	Grease Fitting	1877						
3	Housing	CDA-L24-H						
4	Ball Bearing	B-R16						
5	End Nut	EN-CDA-L24						
6	End Nut Socket	ENT-CDA-L24						